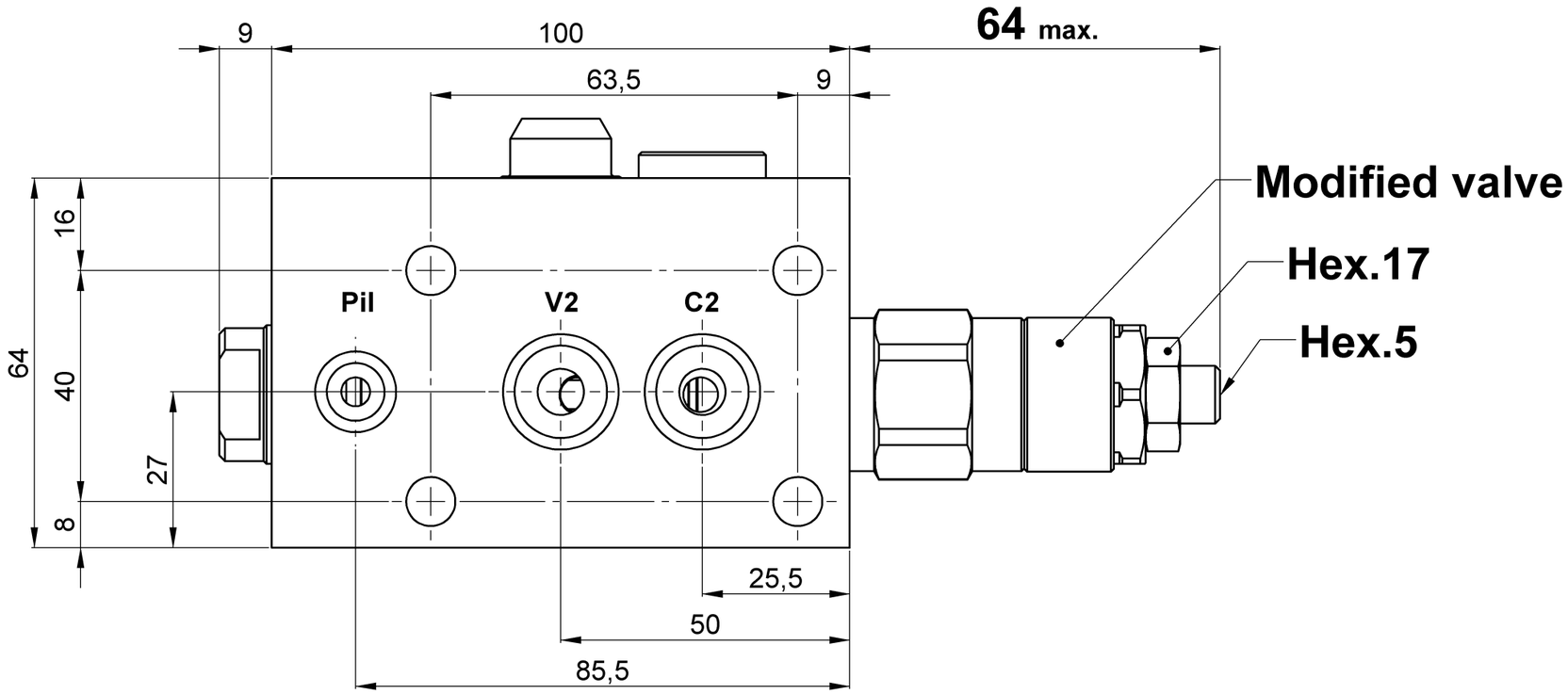

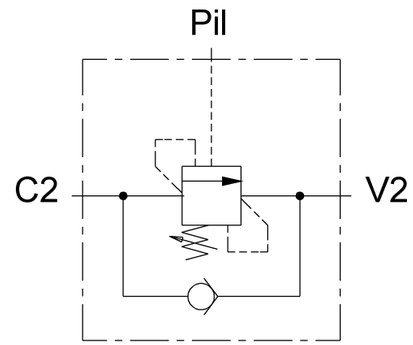

Max. pressure = 350 bar

Max. flow = 40 l/min

Pressure setting = at least 1.3 times the load induced pressure

Pilot ratio = 3.6 : 1

Port size:
V2-C2 = 3/8
Pil = Ø5

Adj. press. range bar = 60-210

Press. increase bar/turn = 60

Std. setting bar (Q= 5 l/min) = 200

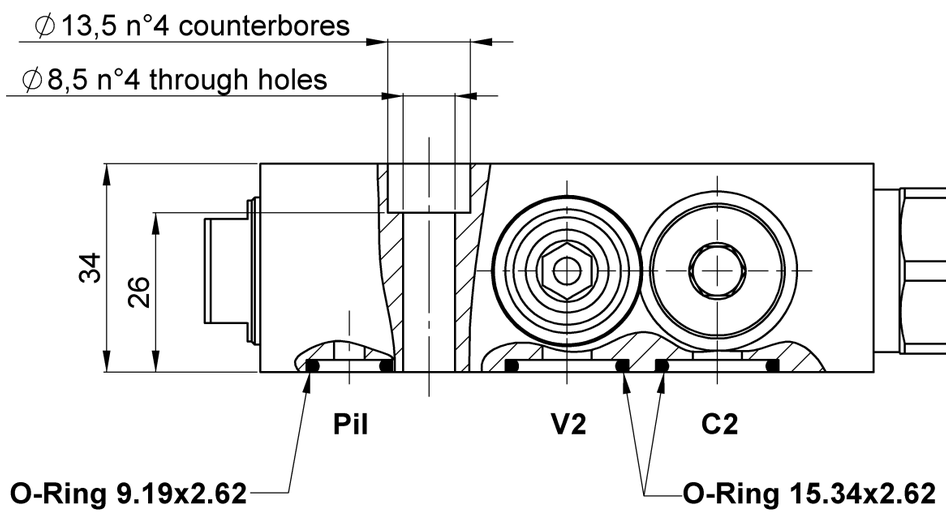

For dimensions without tolerance, consider ±0.5 mm

All dimensions : mm

Denominazione / *Denomination* **VBSOSE-FC-NA-38-1:3-20-A**			**Rexroth Bosch Group** Bosch Rexroth Oil Control S.p.A.
Specifiche *Specifications* -			Ufficio Tecnico *Technical Dep.* **DC-MA/ECM**
-			Gerarchia Prodotto *Product Hierarchy* -
-			
Massa / Mass (kg) -	Cliente e codice articolo *Customer and article code* -		Kit guarniz. *Seal kit* **E00000000000008 R930004538**
Richiesta / *Request* **UT11950**	Num. schema idraulico / *Hydraulic scheme no.* -		Modifiche *Changes*
Tipo cavità Cavity type - **A3**	Studio di riferimento / *Reference study* -		Sostituisce il *Replaces* **054165100220000**
	Disegnato / *Designed by* **Cirillo**	Data / *Date* **30/03/12**	Codice *Code* **05416510022000A**
	Verificato / *Checked by* **Ortiz**	Scala / *Scale* **1:1**	
	Direttorio del file Cad / *Cad file directory* K:\Design\Cad 3D\Ingombri\05416510022000A		Material number **R930006887**

Disegno di proprietà BOSCH REXROTH OIL CONTROL S.p.A. tutelato ai termini di legge. E' vietata la riproduzione e la diffusione non autorizzata.
This drawing is a property of BOSCH REXROTH OIL CONTROL S.p.A. protected according to the laws. Unauthorized reproduction and distribution is strictly prohibited.