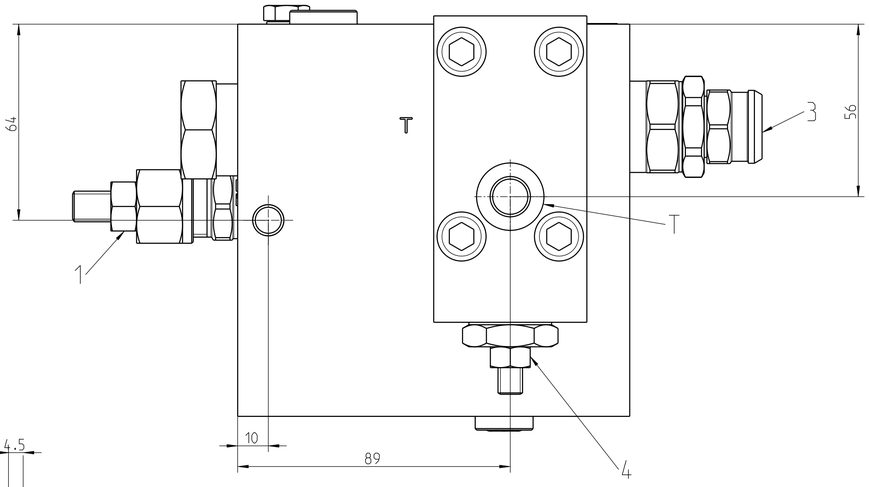

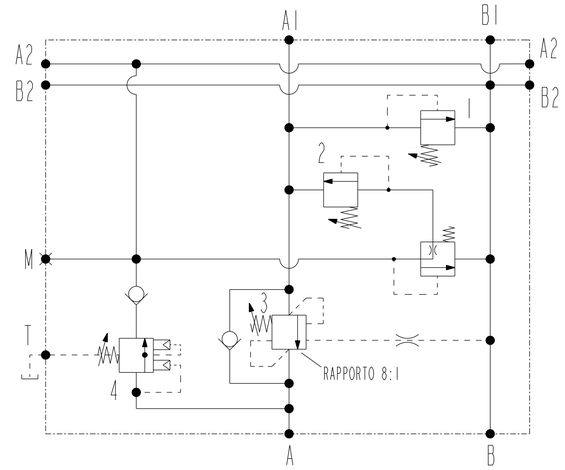

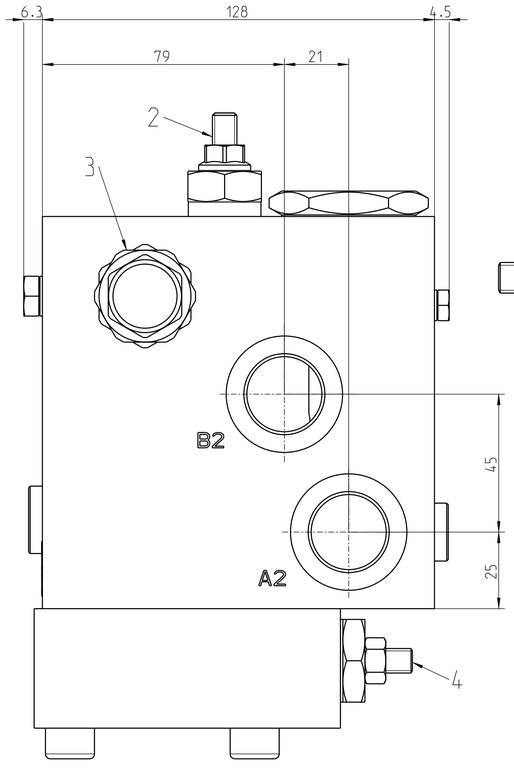

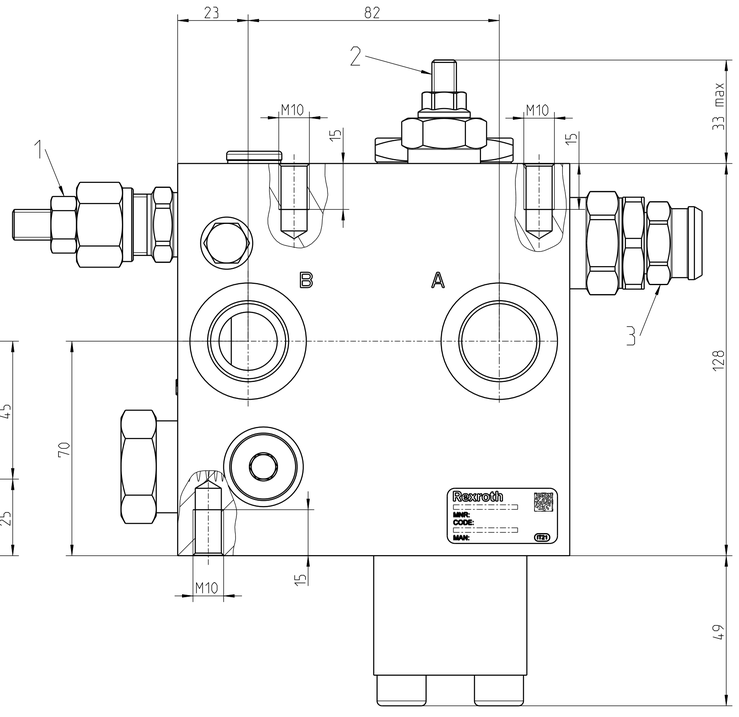

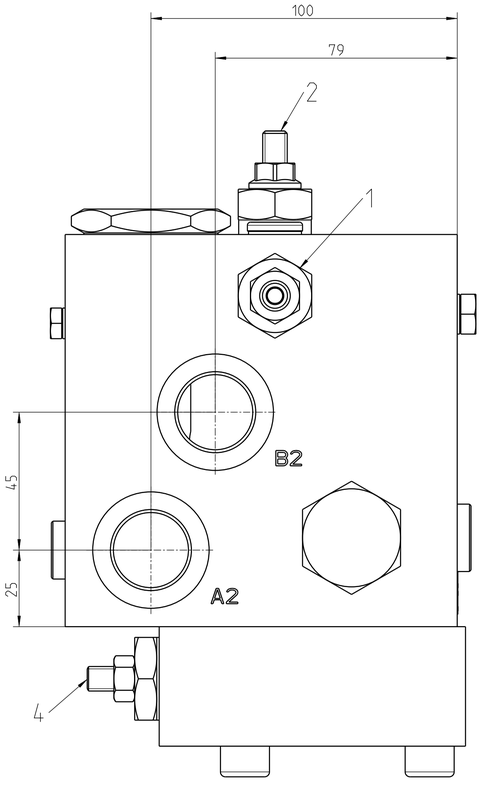

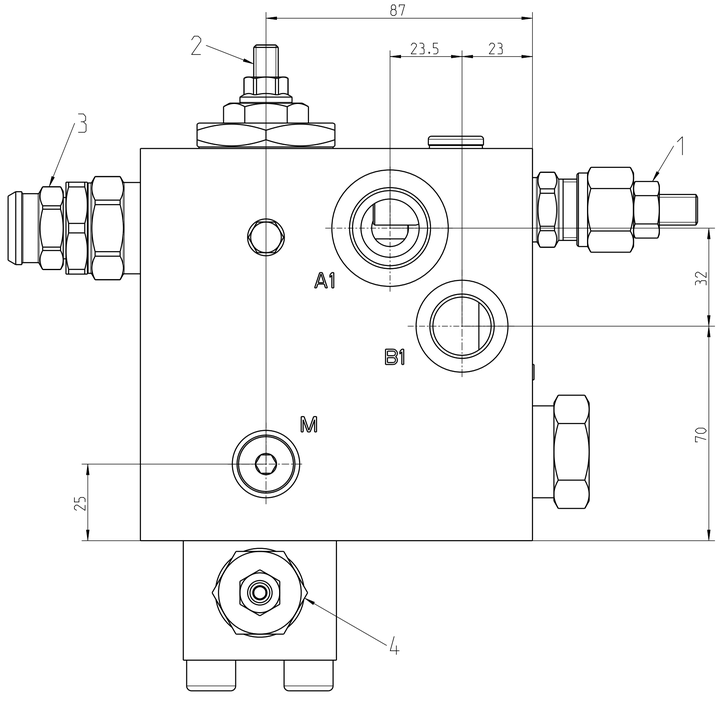

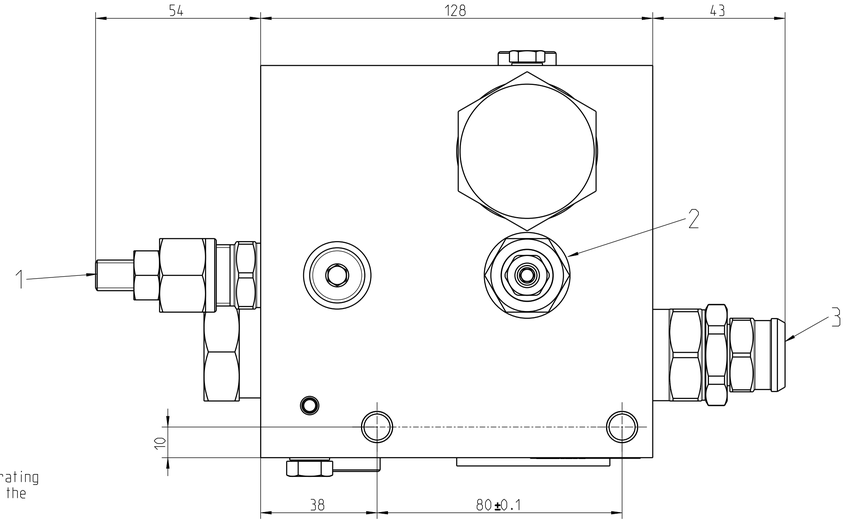

Operating pressure: up to 210 bar
Max. flow: 150 l/min

PRESSURE SETTINGS
Valve 1:
280 bar 5 l/min
Pressure increase: 82 bar/turn

Valve 2:
50 bar cracking pressure
Pressure increase: 88 bar/turn

Valve 3:
230 bar 5 l/min
Pressure increase: 201 bar/turn

Valve 4:
175 bar 5 l/min
Pressure increase: 46 bar/turn

Port size:
A-A1-A2-B-B2 = G 3/4 ISO 1179-1
B1 = G 1/2 ISO 1179-1
M-T = G 1/4 ISO 1179-1

Manifold: (black anodized) aluminium
Note: Aluminium bodies are often strong enough for operating pressures exceeding 210 bar (3045 psi), depending from the fatigue life expected in the specific application.

ETICHETTA / LABEL NP169

AA	--	20240515	ericorti	ericorti	fabirebe	IT21	DC-CH/ENG141	ECR50231
Ind.	Change/Mod.	YYYYMMDD	Drawn/Dis.	Checked/Contr.	Releas./Appr.	BWN	Resp. dept./Ente resp.	Add. info./Info. aggiuntive

Lang./Lin. EN/IT	Syst. PE	Wght./Peso 6.890 kg	rexroth A Bosch Company	07012599000000E G.I.AUTOCOMPATTATORI-E 07012599000000E G.I.AUTOCOMPATTATORI-E		Sheet/Fg. 1/1
		Scale/Scala 1:1	OFFER DRAWING	Doc./type GEZ	RB11147000	DP/SD 001 Ind. AA Format A1
MNR R930007176			Disegno per offerta	Repl. for		Repl. by

© Bosch Rexroth AG. Tutti i diritti riservati, anche riguardanti
eventuali diritti di proprietà industriale. Divieto di riproduzione e di
utilizzo del contenuto o di parti di esso, anche in caso di domande di diritti di proprietà industriale.

© Bosch Rexroth AG. All rights reserved, also regarding any disposal,
reproduction, editing, distribution, as well as
in the event of applications for industrial property rights.

RB11147000 / 07012599000000E1 / AA.0 / 07012599000000E / ASSEM / A8.1