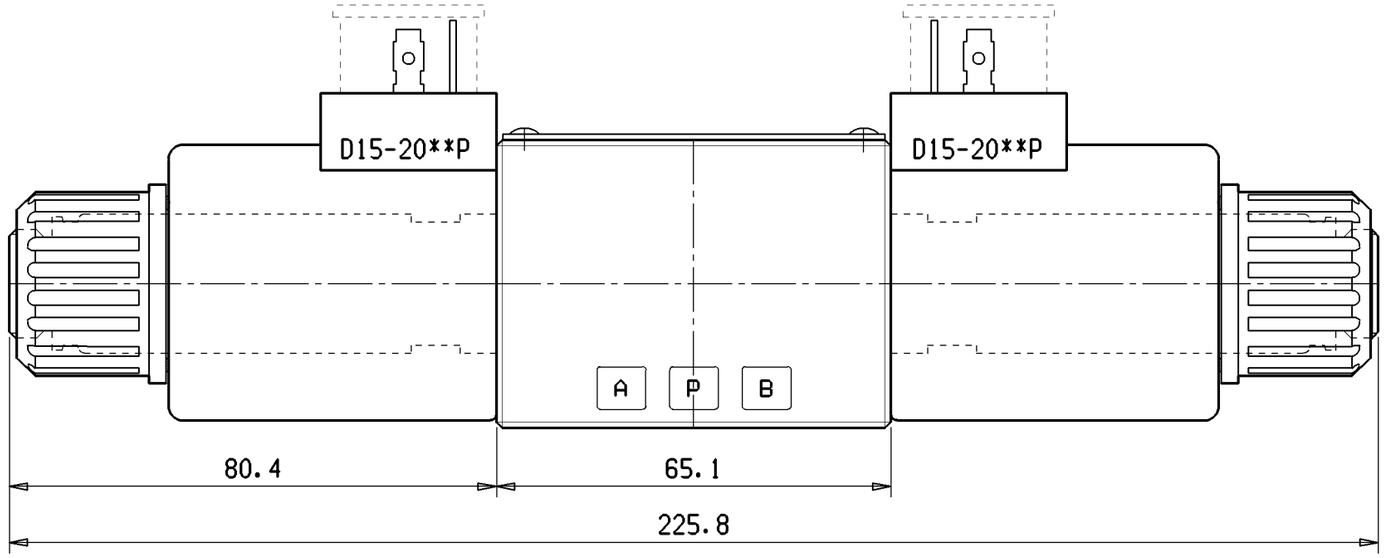

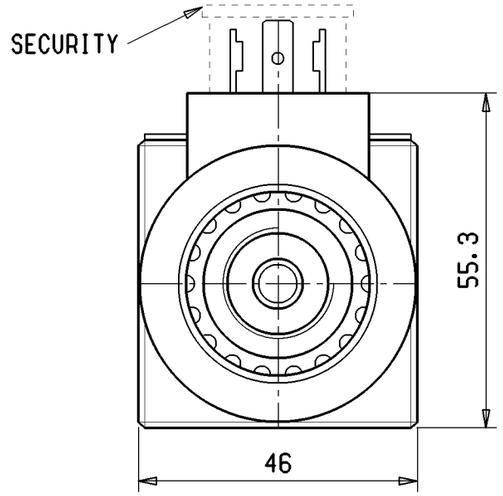

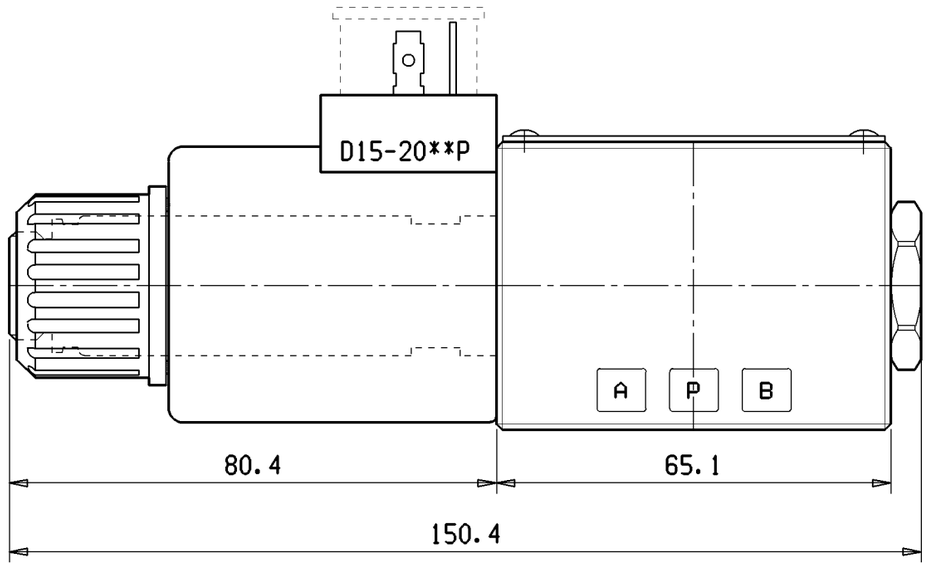

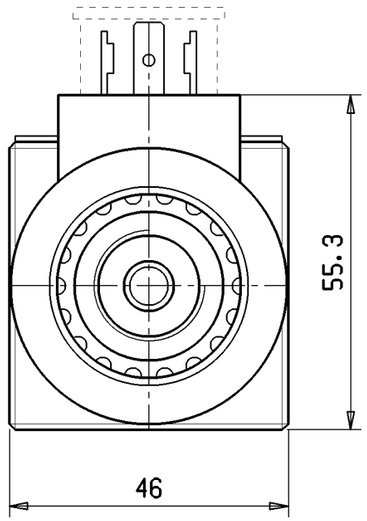

AVAILABLE HYDRAULIC LAYOUT

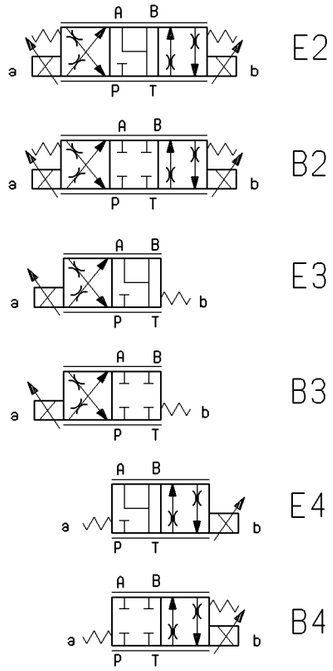

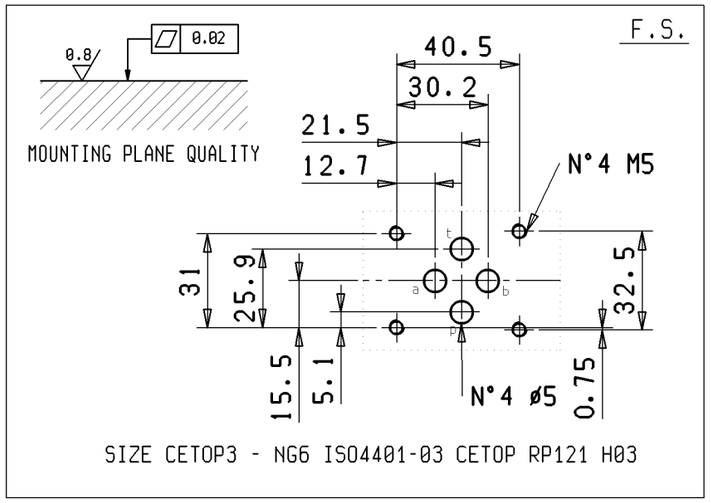

TECHNICAL DETAIL COIL

COIL CONNECTION DIN 43650 ISO 4400
PROTECTION CLASS IP 65

NOMINAL VOLTAGE	POWER	MAX CURRENT	RESISTANCE	STAB.TEMP.	PWM
Volt	Watt	Amp a 20°C	Ohm±7%-20°C	Ambient +60°C	Hz
V 12 DC	36	1.76	4.0	150°C	120
V 24 DC	36	0.88	13.8	150°C	120

TECHNICAL DETAIL OIL

FLUID HYDRAULICS: MINERAL OIL, VISCOSITY AT ISO-VG10/100°cSt AT 40°
TEMPERATURE RANGES: AMBIENT FROM -20°C A +50°C - OIL FROM -20°C A +80°C
CONTAMINATION : ISO 4406 */18/14 - NAS 8 - FILTRATION DATA 10 MICRON

I.M.	Data	Modifica	Firma	I.M.	Data	Modifica	Firma
				.	.	.	.
				.	.	.	.

TECHNICAL CHARACTERISTIC :

SIZE: CETOP 3 - NG6
ISO 4401 CETOP RP 121 H03
NORMAL FLOW RATE AT ΔP 10 Bar:
10 - 20 - 30 L/MIN
MAX. PRESSURE ON P-A-B: 310 BAR
MAX. PRESSURE ON T DYNAMICS: 210 BAR

A3 | 5.3 | 1.6 | 0.4 | 0.1

Denominazione: OVERALL DRAWING PROPORTIONAL VALVE

Gruppo: LC1-P

Proprieta' della Oleodinamica LC s.r.l.
Qualunque riproduzione o cessione a terzi e' rigorosamente vietata.

Toll. generali:
Lungh. e ø <18 ±0,1
Lungh. e ø >18 ±0,15
Smussi e Raggi non quotati 0,3
Angoli ± 30'
Fusioni ± 0,3

Scala: 1:1
Data: 30-11-04
Disegnato: Marco S.
Controllo: M.D.

Rexroth Bosch Group

Codice: L5180_
Archivio: Complessivi
Matricola:
Modifiche:
Sostituisce: