PLKE08

PROPORTIONAL PRESSURE CONTROL VALVE DIRECT OPERATED

SERIES 10

CARTRIDGE TYPE
seat 3/4-16 UNF-2B (SAE-08)

p max **400** bar
Q max **2** l/min

SEAT DIMENSIONS: 3/4-16 UNF-2B (SAE-08)

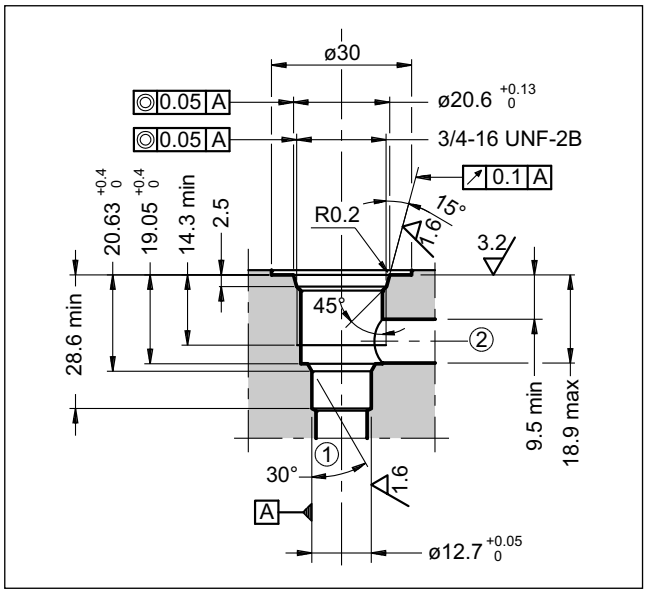

OPERATING PRINCIPLE

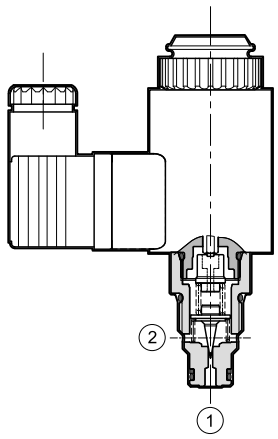

— The PLKE08 valve is a proportional pressure control valve, direct operated, cartridge type. They can be used in blocks and manifolds with SAE-08 seat.

— The valve is suitable as a pilot stage for remote control of two stage pressure control and reducing valves.

— The design of this valve has a mechanical pressure limitation feature for higher safety of the application.

— The valve can be controlled directly by a current control supply unit or combined with an external electronic card to maximize the valve performances (see point 11).

— The valve is available in four pressure control ranges up to 350 bar.

PERFORMANCES

(obtained with mineral oil with viscosity of 36 cSt at 50°C and electronic control card)

Maximum operating pressure (**NOTE**): - port 1 - port 2	bar	 400 210
Minimum controlled pressure	see p min = f(Q)	
Nominal flow Maximum flow	l/min	1 2
Step response	see point 5	
Hysteresis (with PWM 200 Hz)	% of p nom	< 5%
Repeatability	% of p nom	< ±1,5%
Electrical characteristic	see point 4	
Ambient temperature range	°C	-20 / +60
Fluid temperature range	°C	-20 / +80
Fluid viscosity range	cSt	10 ÷ 400
Fluid contamination degree	According to ISO 4406:1999 class 18/16/13	
Recommended viscosity	cSt	25
Mass	kg	0.42

HYDRAULIC SYMBOL

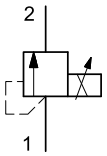

NOTE: The maximum operating pressure is the sum of set pressure and return flow pressure.

1 - IDENTIFICATION CODE

PL	K	E	08	-		/	10		-			/	

Pressure control valve

Cartridge type

Electrical proportional control

Size

Pressure control range
080 = up to 80 bar
170 = up to 170 bar
250 = up to 250 bar
350 = up to 390 bar

Series No.
(from 10 to 19 sizes and mounting dimensions remain unchanged)

Seals:
N = NBR seals for mineral oil (**standard**)
V = FPM seals for special fluids

Option: manual override (see at point 8)

Coil electrical connection:
K1 = plug for connector type EN 175301-803 (ex DIN 43650) (**standard**)
K2 = plug for connector type AMP JUNIOR
K7 = plug for connector type DEUTSCH DT04-2P male

D12 = Nominal solenoid voltage 12 V DC
D24 = Nominal solenoid voltage 24 V DC

2 - CHARACTERISTIC CURVES

(measured with viscosity of 36 cSt at 50 °C)

Typical control curves according to the current supplied to the solenoid, measured with input flow rate Q = 1 l/min. The curves have been obtained without any hysteresis and linearity compensation and they are measured without any backpressure.

PRESSURE CONTROL p = f (I)

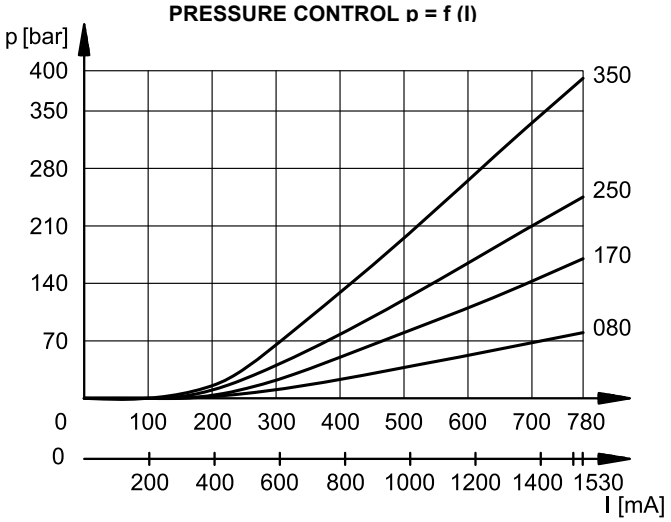

PRESSURE VARIATION p nom = f (Q)

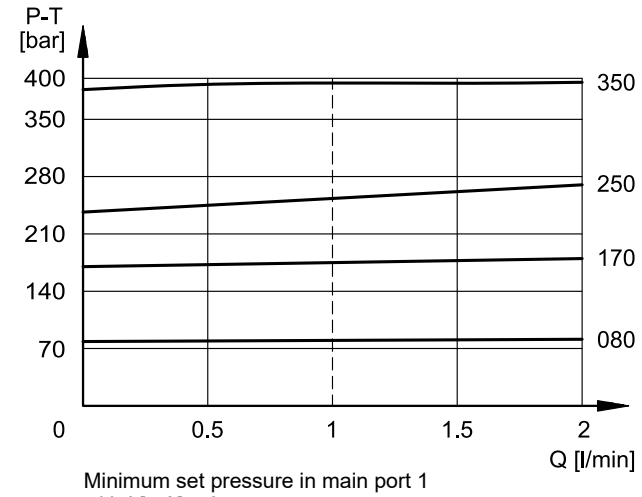

Minimum set pressure in main port 1 with I [mA] = 0

MINIMUM CONTROLLED PRESSURE p min = f (Q)

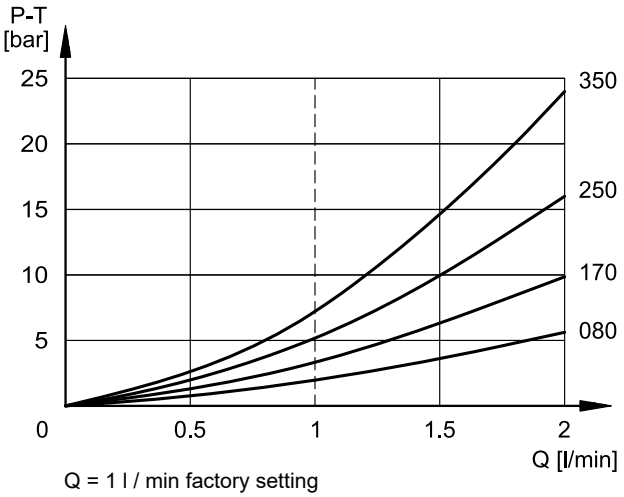

Q = 1 l / min factory setting

3 - MAX PRESSURE VALUES

This valve incorporates a mechanical limit of the maximum pressure, that operates independently of the applied current. This kind of design ensures that the pressure cannot rise over even if the solenoid current exceeds the maximum current ($I > I_{max}$).

Values obtained with oil viscosity of 36 cSt at 50°C, Q = 1 l/min

		PLKE08-080	PLKE08-170	PLKE08-250	PLKE08-350
pressure value at 780 mA	bar	80	170	250	390
max pressure value when $I > I_{max}$	bar	90	190	290	440

4 - ELECTRICAL CHARACTERISTICS

Proportional solenoid

The proportional solenoid comprises two parts: tube and coil.

The tube, screwed to the valve body, contains the armature which is designed to maintain friction to a minimum thereby reducing hysteresis.

The coil is mounted on the tube and secured by means of a lock nut. It can be rotated through 360° depending on installation clearances.

NOMINAL VOLTAGE	V DC	**12**	**24**
RESISTANCE (at 20°C)	Ω	4.98	21
NOMINAL CURRENT	A	1.53	0.78
DUTY CYCLE		100%	
ELECTROMAGNETIC COMPATIBILITY (EMC)	According to 2014/30/EU		
CLASS OF PROTECTION Coil insulation (VDE 0580) Impregnation	class H class F		

Protection from atmospheric agents IEC 60529

The IP protection degree is guaranteed only with both valve and connectors of an equivalent IP degree correctly connected and installed.

electric connection	electric connection protection	whole valve protection
K1	IP65	IP65
K2	IP65	
K7	IP65/67	

5 - STEP RESPONSE

(obtained with mineral oil with viscosity of 36 cSt at 50 °C and electronic control card)

Step response is the time taken for the valve to reach 90% of the set pressure value following a step change of reference signal.

The table illustrates typical step response times measured with a PLKE08-350 bar and with input flow rate Q = 0,5 l/min.

REFERENCE SIGNAL STEP	0 → 100%	100 → 0%
Step response [ms]	80	50

6 - ELECTRIC CONNECTIONS

Connectors for K1 connection are always delivered together with the valve.

connection for EN 175301-803 connector
code **K1** (**standard**)

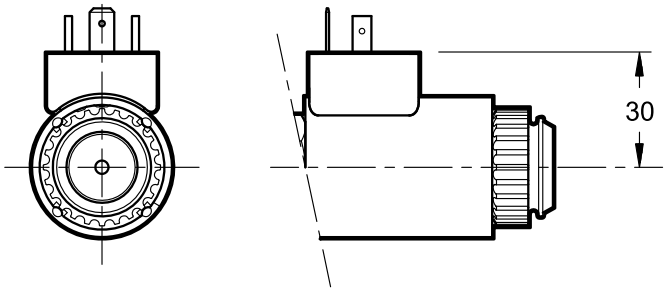

connection for AMP JUNIOR connector type
code **K2**

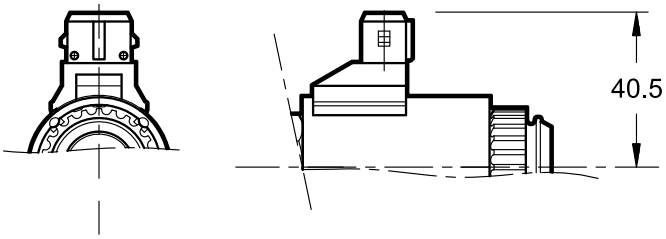

connection for
DEUTSCH DT06-2S male connector
code **K7**

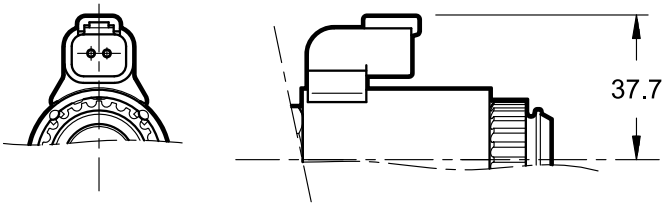

7 - OVERALL AND MOUNTING DIMENSIONS

dimensions in mm

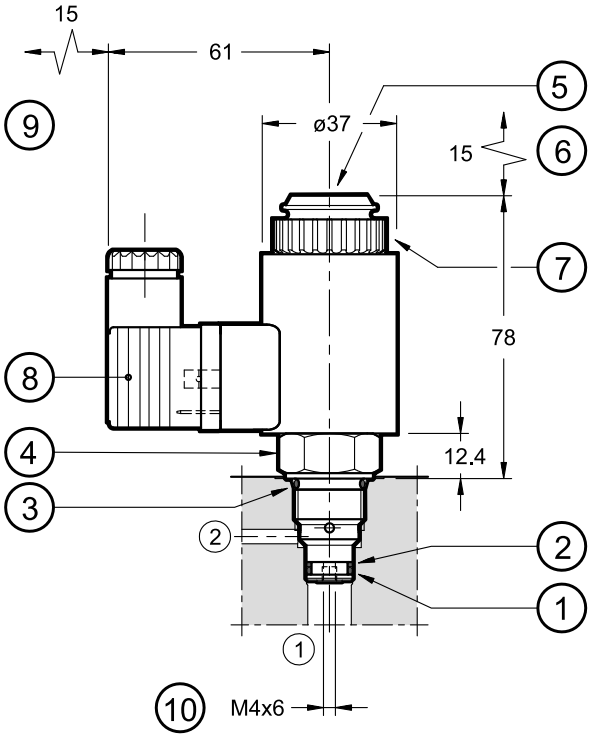

1	OR type 2037 (9.25x1.78) - 90 shore
2	PARBAK type 8-012 (9.96x1.14x1.35)
3	OR type 3-908 (16.36x2.2) - 70 shore
4	Cartridge tightening: spanner 24 Tightening torque 50 Nm
5	Manual override, integrated in the solenoid tube
6	Coil removal space
7	Coil locking ring: tightening torque 5 Nm ± 0,5
8	Electric connector type EN 175301-803 (ex DIN 43650)
9	Connector removal space
10	Seat for optional calibrated flow restrictor

8 - MANUAL OVERRIDES

These valves have solenoids whose pin for manual operation is integrated in the tube. Actuate this override by pushing it with a suitable tool, minding not to damage the sliding surface.

Two different manual override versions are available upon request:

- **CM** version, manual override boot protected.
- **CK1** version, knob to screw

CM Version	CK1 Version
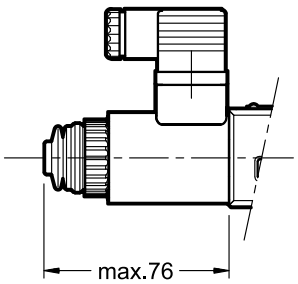	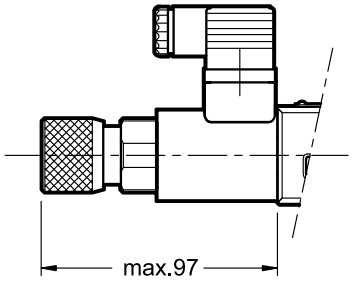
Code: 3404100043	Code: 3404100041

9 - HYDRAULIC FLUIDS

Use mineral oil-based hydraulic fluids HL or HM type, according to ISO 6743-4. For these fluids, use NBR seals (code N). For fluids HFDR type (phosphate esters) use FPM seals (code V). For the use of other fluid types such as HFA, HFB, HFC, please consult our technical department.

Using fluids at temperatures higher than 80 °C causes a faster degradation of the fluid and of the seals characteristics. The fluid must be preserved in its physical and chemical characteristics.

10 - INSTALLATION

These valves can be installed in any position without impairing correct operation if it is ensured that there is no air in the hydraulic circuit.

Otherwise, vertical mounting with solenoid downward is preferable. In this case you must consider possible variations of the minimum controlled pressure values reported in point 2.

Connect the valve main port 2 directly to the reservoir.

NOTE: Occurring return pressures are to be added up to the value of pressure setting at main port 1.

11 - ELECTRONIC CONTROL UNITS

For one valve

EDM-M102	24V DC solenoids	rail mounting DIN EN 50022	see cat. 89 252
EDM-M163	12V DC solenoids		
EDC-102	24V DC solenoids	plug-in mounting on electrical connection	see cat. 89 120
EDC-163	12V DC solenoids		

For two valves

EDM-M30022	24V DC solenoids	rail mounting DIN EN 50022	see cat. 89 252
EDM-M36633	12V DC solenoids		

DUPLOMATIC MOTION SOLUTIONS
a member of DAIKIN group

DUPLOMATIC MS Spa
via Mario Re Depaolini, 24 | 20015 Parabiago (MI) | Italy
T +39 0331 895111 | E vendite.ita@duplomatic.com | sales.exp@duplomatic.com
duplomaticmotionsolutions.com

REPRODUCTION IS FORBIDDEN. THE COMPANY RESERVES THE RIGHT TO APPLY ANY MODIFICATIONS.